1

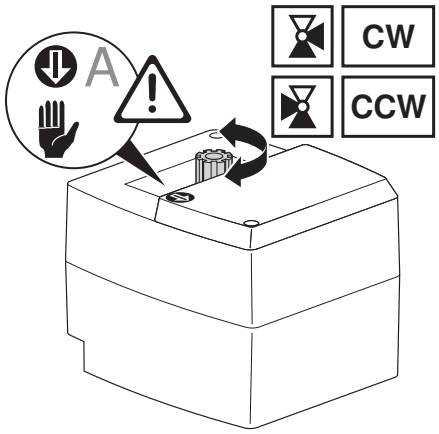

2

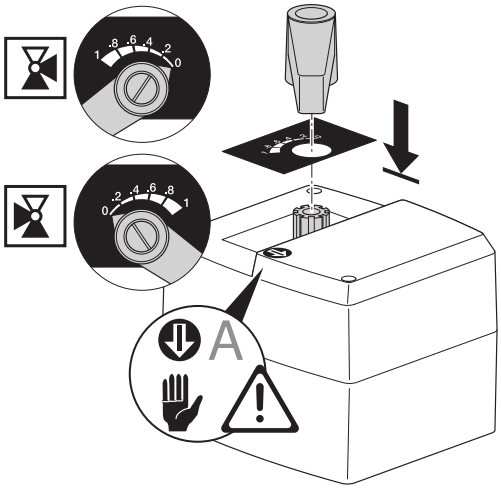

3

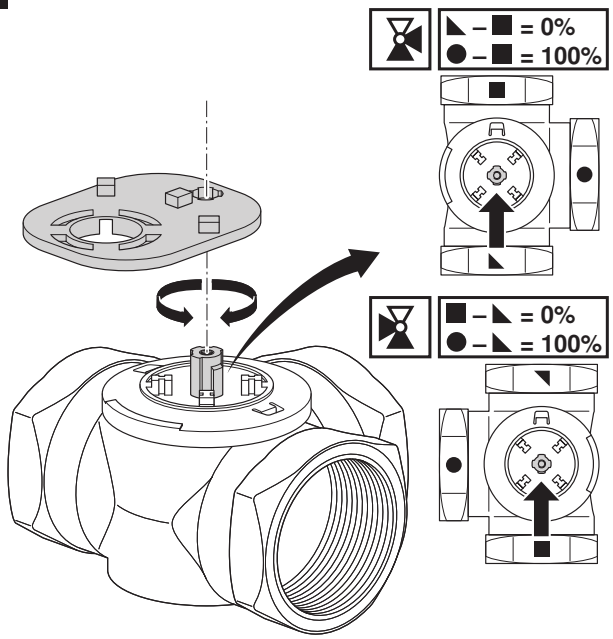

4

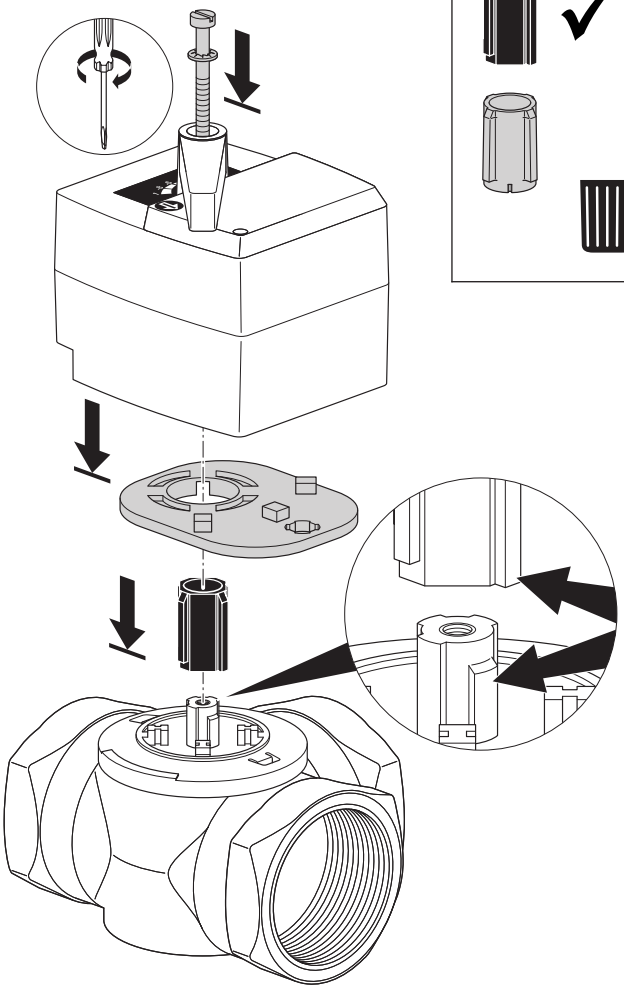

5

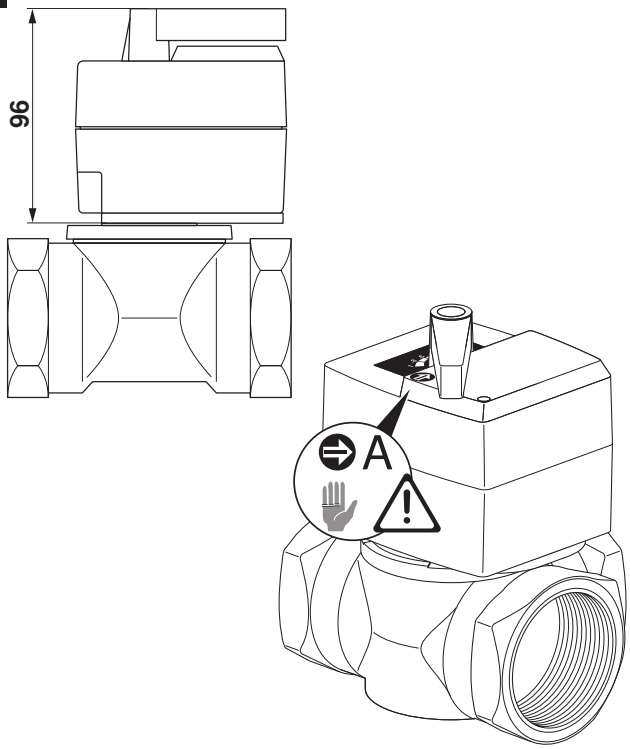

ELESTA energy control

1

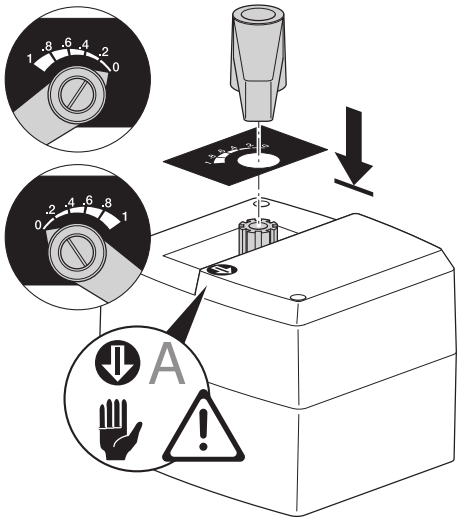

2a | VRG230

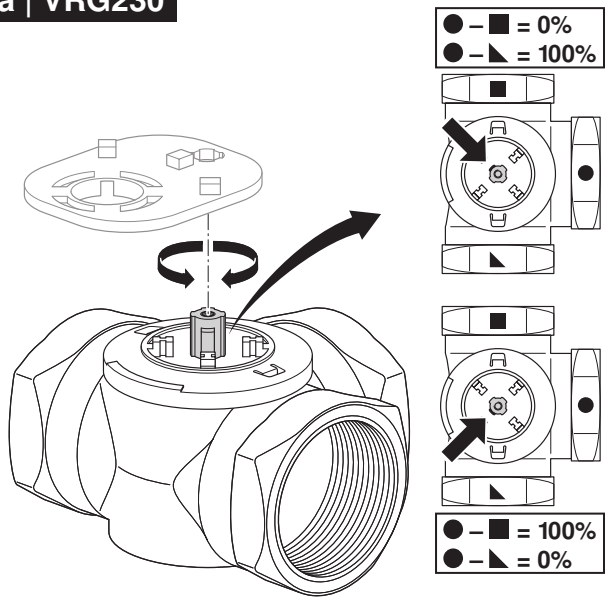

2b | VRG140, VRB140

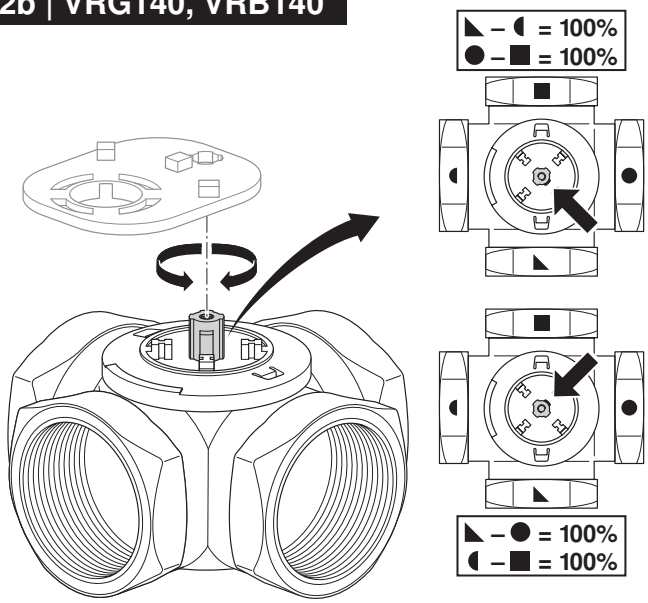

3

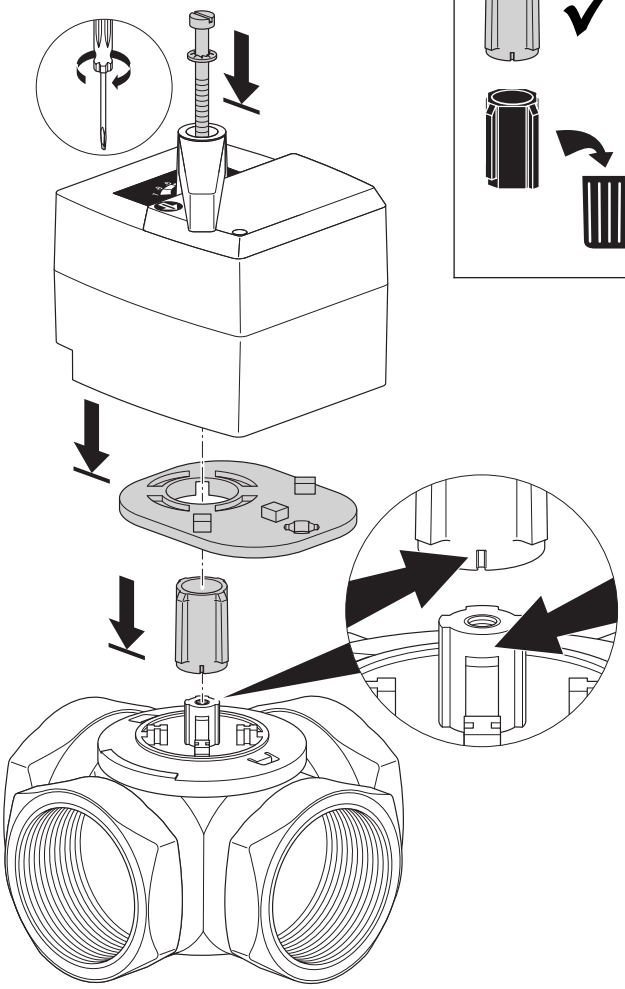
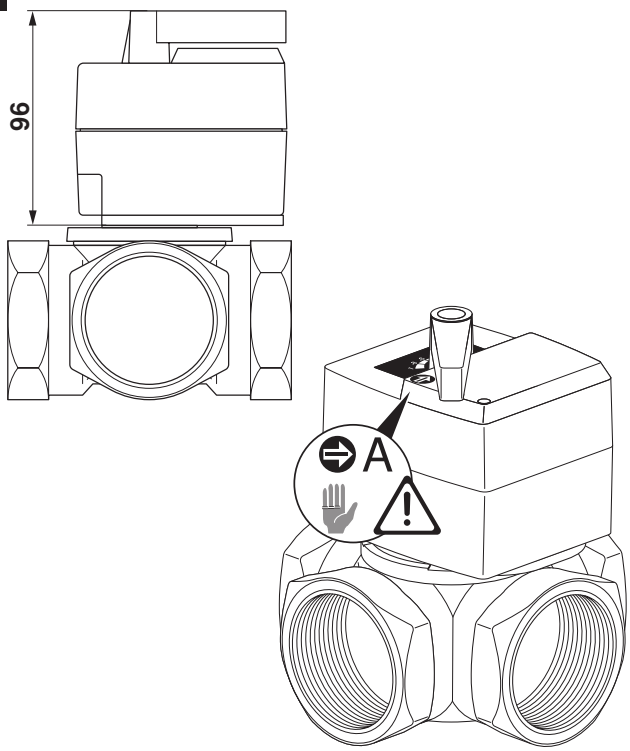
4